PROJECT 10: Design and Analysis of Schmitt Trigger by using Cadence Virtuoso

A Comprehensive Study of Analog Circuits

By: Priya Chaudhary, Astitva Johri and

Bhavya Solanki

Chapters:

List of Figures……..……. 3

1. Introduction …….. 4
2. Brief Description…… 5
3. Circuit Design……. 6-7
   3.1 Initial Setup……..……..……..…….. 6
   3.2 Component Selection……. 6
   3.3 Circuit Schematic……... 6
   3.4 Simulation Setup……..…….. 6
   3.5 Analysis ……..……. 7
4. Simulation Results…….. 8
5. Advantages and Disadvantages…….. 9
   5.1 Advantages……. 9
   5.2 Disadvantages……. 9
6. Conclusion…….. 10
7. Frequently Asked Questions (FAQs)…….. 11

LIST OF FIGURES

Figure 3.1 Circuit of Schmitt Trigger…… 7

Figure 4.1 Simulation Results of Schmitt Trigger……. 8

1. INTRODUCTION

A Schmitt Trigger is an electronic circuit that converts noisy or analog input signals into clean digital outputs by incorporating hysteresis. Unlike conventional comparators, which have a single threshold voltage, a Schmitt Trigger employs two thresholds: an upper threshold and a lower threshold. This dualthreshold mechanism ensures the circuit's output state changes only when the input crosses specific levels, preventing frequent transitions caused by noise or minor signal fluctuations. This capability makes it indispensable in applications requiring reliable signal processing.

Schmitt Triggers find widespread use in various fields, including:

1. **Waveform Shaping**: Converting sinusoidal or triangular input signals into square waves.
2. **Signal Conditioning**: Enhancing the quality of noisy signals.
3. **Digital Signal Processing**: Creating clean logic-level transitions.
4. **Oscillators and Timing Circuits**: Enabling stable operation in circuits like relaxation oscillators.

In this documentation, we will explore the design and analysis of a Schmitt Trigger using Cadence Virtuoso. Cadence Virtuoso is a powerful electronic design automation (EDA) tool that provides an integrated environment for schematic design, simulation, and layout.

2. BRIEF DESCRIPTION

A Schmitt Trigger operates by introducing two threshold voltages, upper and lower, which determine the switching points of the output signal. Unlike a regular comparator, which switches output states at a single threshold voltage, the Schmitt Trigger ensures that small variations in input do not lead to frequent output switching, making it ideal for noisy environments.

The basic working principle involves:

1. Comparing the input signal with two preset threshold levels.
2. Switching the output state depending on the input crossing these thresholds.

Applications:-

- Waveform shaping: Converts sinusoidal or triangular waves into square waves.
- Noise immunity: Filters out noise from input signals.
- Pulse generation: Creates clean pulses for digital circuits.

3. CIRCUIT DESIGN

3.1 Initial Setup

- Launch Cadence Virtuoso and create a new library for your design.
- Define the technology node (e.g., 45nm, 180nm) for the circuit.

3.2 Component Selection

- Use PMOS and NMOS transistors for the design.
- Add resistors and capacitors, if required, to control the hysteresis range.

3.3 Circuit Schematic

- Draw the circuit schematic:
  - Connect the input signal to the gate of the NMOS and PMOS transistors.
  - Configure the feedback network to introduce hysteresis.
  - Use a voltage divider to set the threshold levels.
- Ensure the power supply (VDD and GND) is properly connected.

3.4 Simulation Setup

- Use the Analog Design Environment (ADE) in Cadence Virtuoso.
- Define input voltage sweep parameters and simulation time.
- Set up transient analysis.

3.5 Analysis

- Observe the input-output characteristics.
- Verify the hysteresis behavior by analyzing the voltage transfer curve.
- Ensure proper switching thresholds.

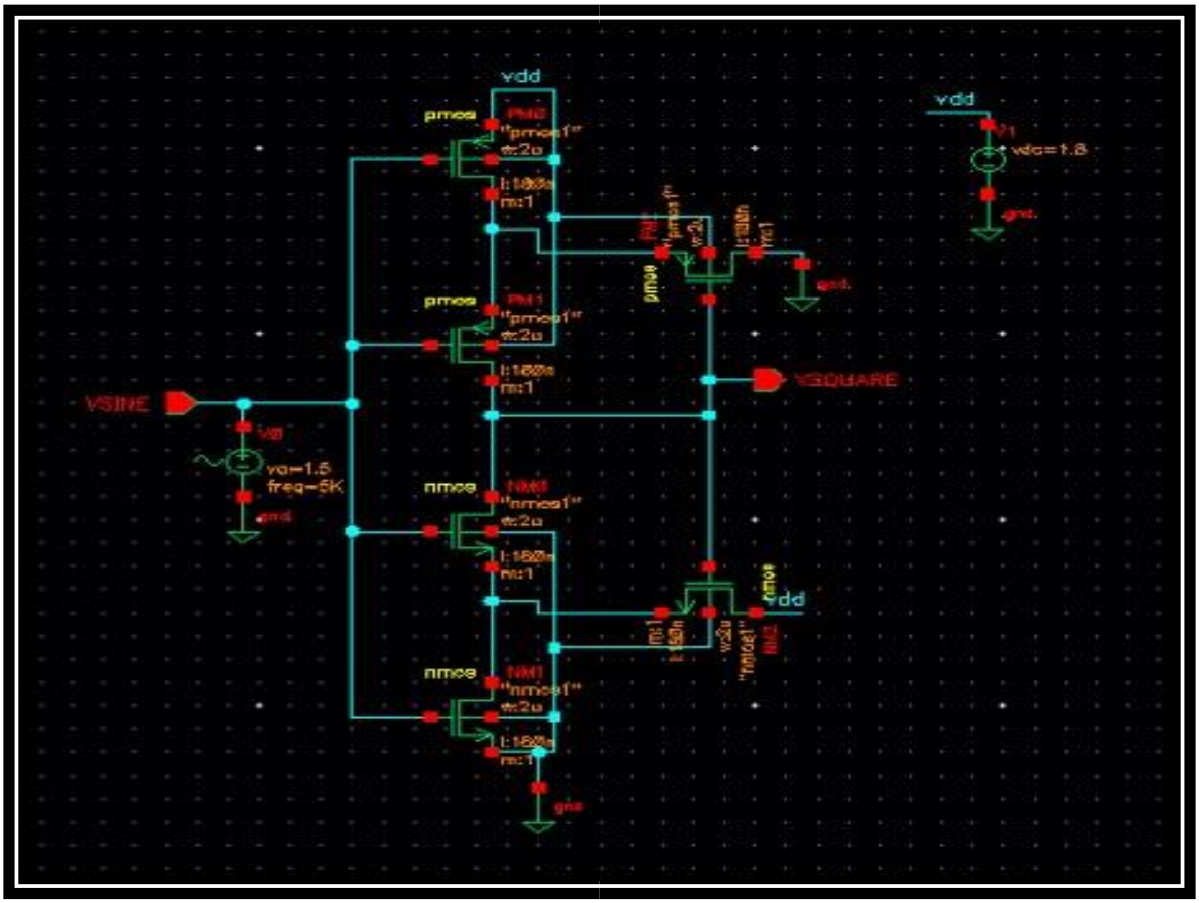

Figure 3.1 Circuit of Schmitt Trigger

4. SIMULATION RESULTS

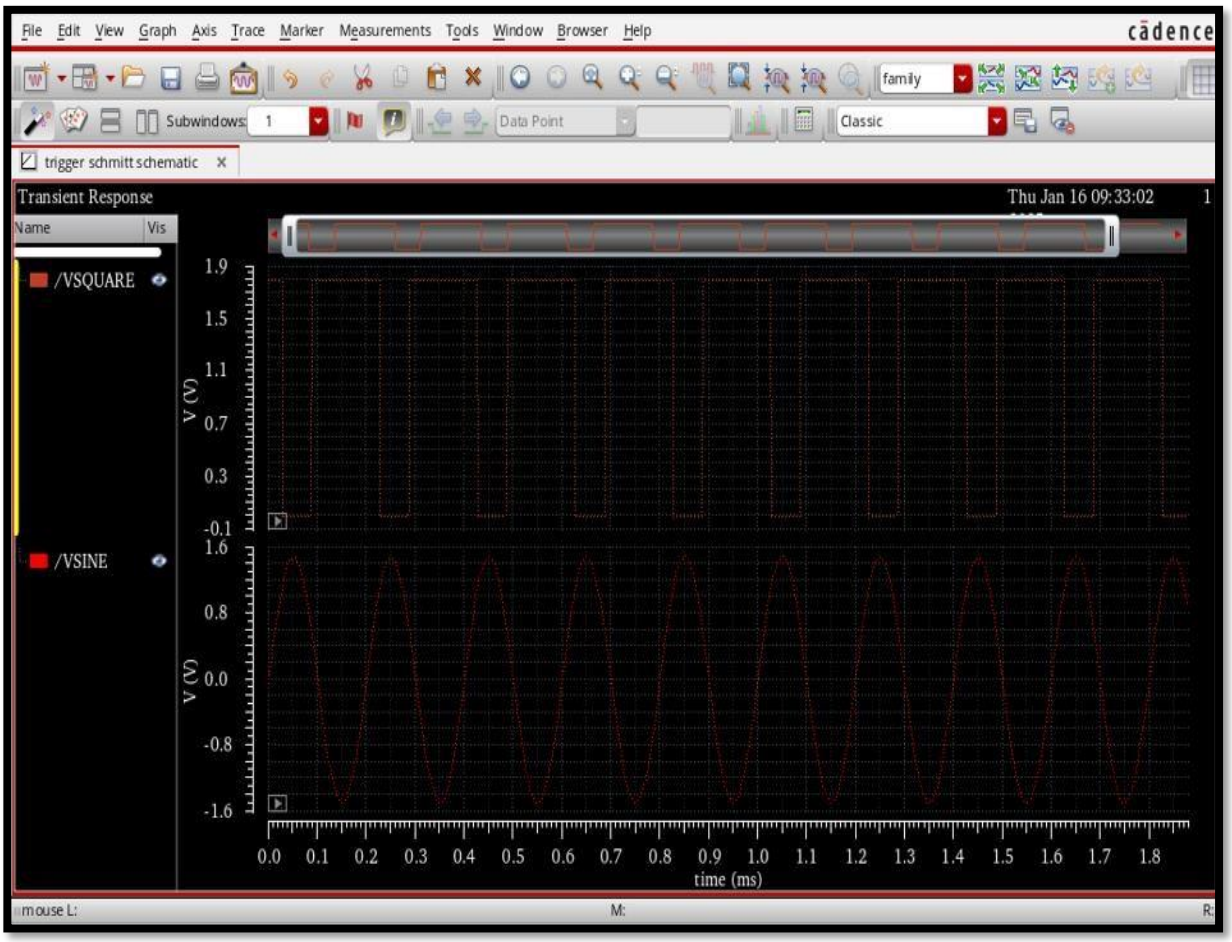

Figure 4.1: Simulation Results of Schmitt Trigger

5. ADVANTAGES AND DISADVANTAGES

5.1 Advantages:-

1. **Noise Immunity**: The hysteresis prevents false triggering due to noise.
2. **Versatility**: Can be implemented in both analog and digital circuits.
3. **Simplicity**: Relatively easy to design and implement.
4. **Low Power Consumption**: Efficient operation with minimal power requirements.

5.2 Disadvantages:-

1. **Fixed Thresholds**: Limited flexibility in adjusting thresholds without redesign.
2. **Additional Components**: Requires extra components for feedback, increasing complexity.
3. **Propagation Delay**: May introduce slight delays due to hysteresis.
4. **Nonlinearity**: Not suitable for precise linear applications.

6. CONCLUSION

The Schmitt Trigger is a critical circuit in modern electronics, offering a simple yet effective solution for noise immunity and signal shaping. By introducing hysteresis through feedback, it ensures stable output transitions and minimizes susceptibility to input noise. Using Cadence Virtuoso for its design and analysis provides a detailed understanding of the circuit's functionality and performance.

Through this exercise, we demonstrated how to:

1. Design a Schmitt Trigger using MOS transistors in Cadence Virtuoso.
2. Set up simulations to analyze the hysteresis behavior and switching thresholds.
3. Evaluate the circuit's advantages, such as noise immunity and versatility, and its limitations, including propagation delays and nonadjustable thresholds.

Despite its minor drawbacks, the Schmitt Trigger remains an invaluable tool for bridging analog and digital domains. Mastering its design using advanced tools like Cadence Virtuoso equips engineers with the skills to address a wide range of practical challenges in signal processing and circuit design. The knowledge gained here can be extended to optimize other circuits requiring similar noise-resilient behaviors.

7. FREQUENTLY ASKED QUESTIONS (FAQs)

Q1: What is the main purpose of a Schmitt Trigger?

Answer: The main purpose is to convert noisy or analog signals into clean digital signals by introducing hysteresis to prevent false triggering.

Q2: Why is hysteresis important in a Schmitt Trigger?

Answer: Hysteresis ensures the circuit does not switch states due to small variations or noise in the input signal. This provides stability and clean output transitions.

Q3: Can I design a Schmitt Trigger without feedback?

Answer: No, feedback is essential to introduce hysteresis, which is the defining characteristic of a Schmitt Trigger.

Q4: How do I choose the threshold voltages for the Schmitt Trigger?

Answer: The threshold voltages depend on the application requirements and can be set using a voltage divider or by adjusting transistor parameters.

Q5: What are the key metrics to analyze in simulation?

Answer: Key metrics include:

- Hysteresis width (difference between upper and lower thresholds)
- Switching speed (propagation delay)
- Noise immunity